EMPIRE INDUSTRIES, INC

FIG. 41

Split Ring Extension Hanger

v | 06.2024

LOCAL: 860 647 1431 • TOLL FREE: 800 243 4844 • ORDERS@EMPIREINDUSTRIES.COM • QUOTES@EMPIREINDUSTRIES.COM

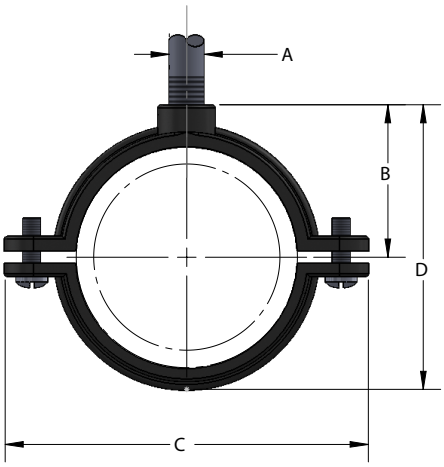

Materials/Finishes:	Plain Malleable Iron (41B) ☐	Electro-Galvanized (41G) ☐
	Chrome Plated (41CR) ☐	
Service:	Designed for the suspension of non-insulated stationary pipe lines horizontally or vertically.	
Approvals:	Complies with Federal Specification WWH-171-E (Type# 25), A-A-1192A (Type# 12), Manufacturers' Standardization Society SP-58 (Type# 12).	
Ordering:	Specify figure number, finish and pipe size.	
Notes:	Split ring extention hangers with hinged design available in 3/8 - 4" (41H)	

PIPE SIZE	PIPE OD	SCREW	A	B	C	D	WGT EACH (LBS)	MAX REC LOAD (LBS)
1/2	0.840	10-24	3/8-16	3/4	2-1/8	1-3/16	0.098	180
3/4	1.050	10-24	3/8-16	7/8	2-1/2	1-9/16	0.112	180
1	1.315	10-24	3/8-16	1-1/8	2-3/4	2	0.147	180
1-1/4	1.660	10-24	3/8-16	1-5/16	3-3/16	2-3/8	0.181	180
1-1/2	1.900	10-24	3/8-16	1-7/16	3-3/8	2-5/8	0.214	180
2	2.375	10-24	3/8-16	1-5/8	3-15/16	3-1/16	0.300	180

PROJECT INFORMATION	APPROVAL STAMP
Project:	☐ APPROVED AS NOTED
Address:	NOTES:
Contractor:	
Engineer:	
Date:	
☐ APPROVED	
☐ NOT APPROVED	